1/18th 4WD Electric Power R/C Desert Car

Specifications:

STYLES	LENGTH	WIDTH	HEIGTH	WEIGHT	WHEEL BASE	DRIVE SYSTEM	GROUND CLEARANCE	DIAMETER OF WHEEL	WIDTH OF WHEEL	GEAR RATIO
Trophy Truck	295mm	168mm	115mm	605g	155mm	4WD Shaft Drive	17mm	58mm	22mm	1:8.8
Desert SCT	305mm	168mm	115mm	620g	155mm	4WD Shaft Drive	17mm	58mm	22mm	1:8.8
Desert Buggy	315mm	170mm	115mm	598g	155mm	4WD Shaft Drive	17mm	55mm	25mm	1:8.8
Desert Monster	290mm	190mm	115mm	655g	155mm	4WD Shaft Drive	25mm	72mm	42mm	1:10.3

Spare Part

58204-Roll Cage A	58205-Roll Cage B (L/R)	58206-Roll Cage C	58207-Control Board +Helmet	58208-Rear Body Post
58209-Wheel Complete PVC (Optional)	58068-Rear Bumper Except For Monster Truck	58045-Motor Gear (13T) Except For Monster Truck	58001-Chassis	58002-Radio Tray
58003-Front Lower Suspension Arm	58004-Rear Lower Suspension Arm	58005-Front Shock Tower	58006-Rear Shock Tower	58007-Steering Hub (Left/Right)
58008-Rear Upright (Left/Right)	58009-Front Hub Carrier	58014-Battery Cover	58013-Centre Dodbones	58010-Steering Arm Complete
58022-Steering Servo Arm Complete	58025-Steering Link C 35.5mm	58023-Rear Upper Link A 43.5mm	58024-Front Upper Link B 38mm	58026-Servo Link D 25mm
58016-Motor Mount	58033-Motor(RC370)	58199-Motor Heat Proof Cover (Optional)	58011-Gear Shelter	58012-Front/Rear Gear Box

Spare Part

58048-Front/Rear Gear Box Complete	58047-Diff. Main Gear Complete(2T Motor Gear)	58113-Diff. Main Gear Complete(4T Motor Gear) (Optional)	58046-Diff. Main Gear (45T)	58099-Drive Gear
58049-Battery (7.2V 1100mAh)	58112-Battery Foam Block	58114-Charger	58015-Battery Cover Post	58032-Front Shock Absorber (Short)
58104-Rear Shock Absorber(Long)	58116-Shock Springs	58031-Diff.Cup	58037-Wheel Axle	58038-Wheel Hex.
58027-Front/Rear Dogbone 46mm	58034-Front /Rear Lower Suspension Pin A Φ2*38	58035-Steering Pin B Φ2*23	58036-Wheel Hex Pin C Φ1.5*7	58052-Antenna Pipe
58105-Air Vessel	58107-Spring Guide A /Spring Clip 3/Spring Cup	58109-O-Ring	58039-Washer. Φ5*2.2*1	58042-Ball Bearing Φ12*Φ8*3.5
58043-Ball Bearing Φ10*Φ6*3	58044-Ball Bearing Φ8*Φ4*3 (Optional)	58098-Oil Bearing Φ12*Φ8*3.5	58108-Oil Bearing Φ8*Φ4*3	58051-Body Clip
02102-Nylon Nut M3	58040-Ball Head A	58041-Ball Head B	58186-Ball Head D	58058-BT2*6BH Screw 6P
58059-BT2*16BH Screw 6P	58056-Round Head Machine Screw 2.5*8 6P	58063-Flattened Head Machine Screw 2.5*6 6P	58060-Countersunk Head Machine Screw 3*6mm 6P	58061-Countersunk Head Self-Tapping Screw 2*6mm 6P

Upgradable Optionals

580019-(AL.)Front Lower Suspension Arm	580020-(AL.)Rear Lower Suspension Arm+Round Head Machine Screw 2*18 *2P 2*18	580021-Front Shock Tower (AL.)+Round Head Machine Screw 2*5*4P 2*5	580022-Rear Shock Tower (AL.)+Round Head Machine Screw 2*5*4P 2*5
580023-Steering Hub (Left/Right) (AL.)	580024-Rear Upright (Left/Right) (AL.)	580025-Front Hub Carrier (AL.)	580027- Front/Rear Dogbone 46mm (AL.)
580049-Centre Dodbones (AL.)+Countersunk Head Machine Screw 2*5*2P 2*5	580050-Universal Drive Joint	580051-Gear Shelter (AL.)	

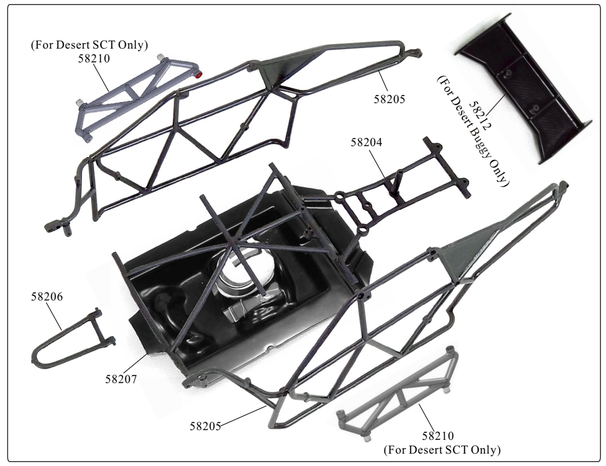

Trophy Truck/Desert SCT Full Assembly View

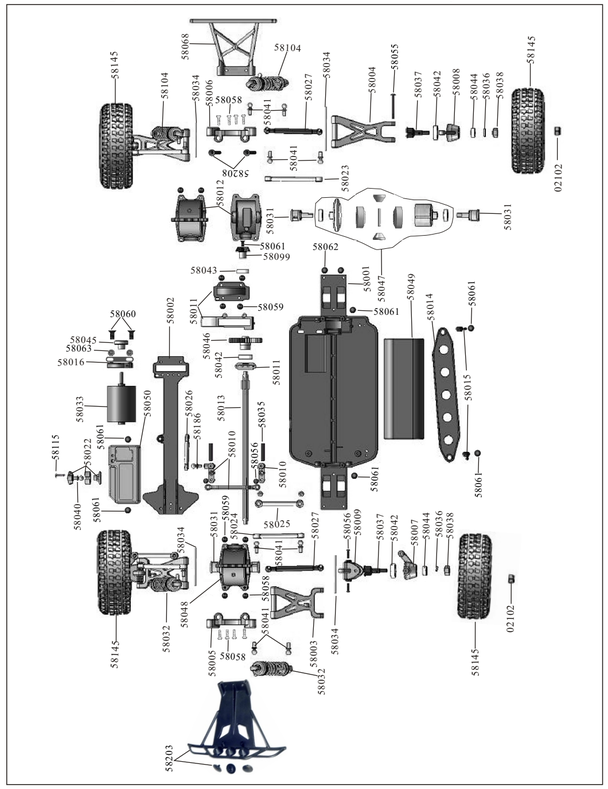

Spare Part

58062-Countersunk Head Self-Tapping Screw 2*8mm 6P	58115-Discal Self-Tapping Screw 2*6mm 2P	58055-Round Head Machine Screw 2*18 6P		

Trophy Truck/Desert SCT-Spare Part

58203-Front Bumper	58143-Wheel Rim	58144-Tyre+Insert Sponge (L/R)	58145-Wheel Complete(L/R)	58210-Body Side Guard (Desert SCT Only)

Dune Sand Rail Buggy-Spare Part

58211-Front Bumper	58212-Wing	58133-Wheel Rim	58134-Tyre+Insert Sponge	58135-Wheel Complete

Monster Sand Rail Truck-Spare Part

58141-Front Bumper	58142-Rear Bumper	58138-Wheel Rim	58139-Tyre+Insert Sponge	58140-Wheel Complete
58073-Motor Gear (11T)				

Optionals

T3919A-Transmitter Mini 2.4G	80312-Transmitter 2.4G	58050-Radio PCB 58103-Servo	80308-Transmitter 2.4G
			58119-Radio PCB

Pro.Spare Part

580018-Front Shock Absorber(Short)(AL.)	580054-Rear Shock Absorber(Long)(AL.)	58095-Battery LiPO (7.4V 1800mAh) (Optional)	58100- Battery Ni-Mh (7.2V 1500mAh) (Optional)
58096-Brushless Electronic Speed Control	58101-Receiver	58097-Brushless Montor	58102-Servo
58143P-Chrome Plated Spoke Rim (Trophy Truck/Desert SCT Only)	58133P-Chrome Plated Spoke Rim (Dune Sand Rail BuggyOnly)	58138P-Chrome Plated Spoke Rim (Monster Sand RailTruck Only)	58213-Chrome Plated Spoke Wheel Complete (Trophy Truck/Desert SCT Only)
58214-Chrome Plated Spoke Wheel Complete (Dune Sand Rail BuggyOnly)	58215-Chrome Plated Spoke Roll Cage		

Upgradable Optionals

580002-Radio Tray (AL.)	580003-Steering Arm Complete (AL.)	580004-Battery Cover (AL)	580005-Motor Mount(AL.)
580016-Diff.Cup (AL.)	580017-Wheel Hex. (AL.)+ Pin Φ1.5*6.7	580018-Front Shock Absorber(Short) (AL.)	580054-Rear Shock Absorber(Long)(AL.)

Dune Sand Rail Buggy Full Assembly View

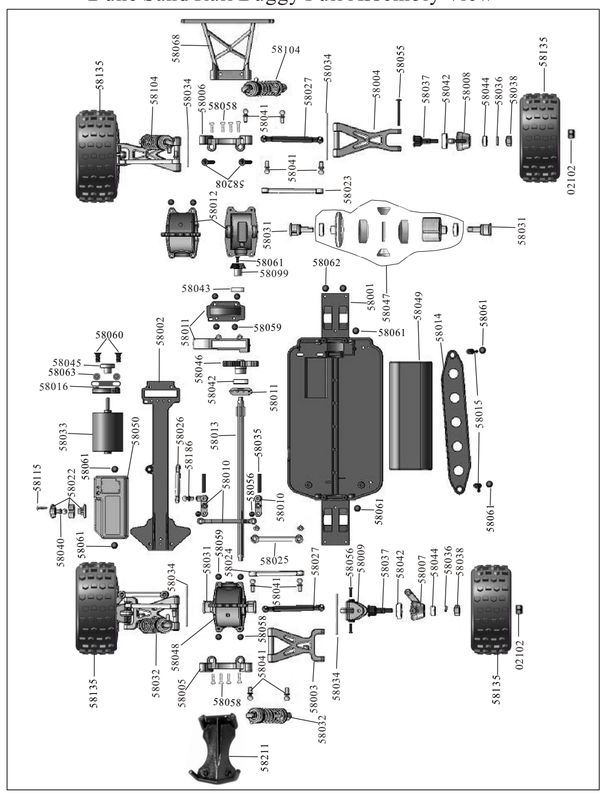
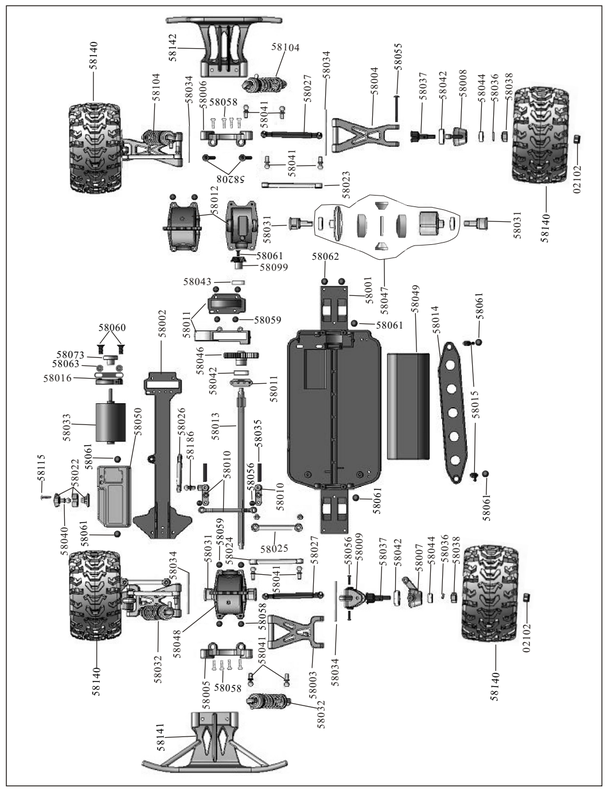
Monster Sand Rail Truck Full Assembly View